SUNLU

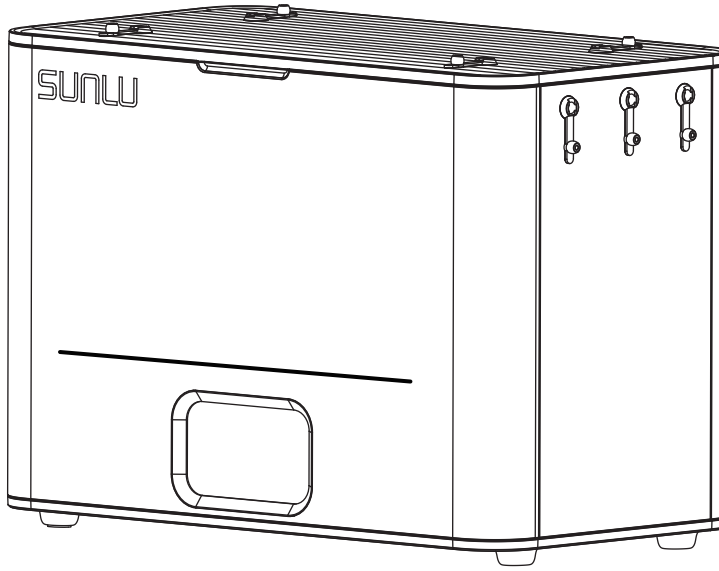

FilaDryer E2 User Manual

3D Printing-Mate

RoHS FC CE

CONTENTS

1. Package Contents ---------- 01
2. Technical Specifications ---------- 01
3. Component Description ---------- 03
4. Important Notes ---------- 03
5. Safety Precautions ---------- 04
6. Operating Instructions ---------- 05-12
   ①Power Connection ---------- 05
   ②Filament Installation ---------- 05-06
   ③Power On ---------- 06
   ④Display Screen Elements ---------- 07
   ⑤Instructions for Use ---------- 09-11
   ⑥Power Off ---------- 11
   ⑦Add Desiccant ---------- 11
   ⑧Sealing ---------- 11
7. Common Troubleshooting ---------- 12-13
8.Certificate of Conformity ---------- 14
9.After-Sales Service ---------- 14
10. Contact us ---------- 14

1 Package Contents

❶ FilaDryer E2 × 1	❹ PTFE Tube 1m × 2
❷ Annealing Tray × 1	❺ User Manual × 1
❸ Power Cable × 1	

2 Technical Specifications

Product Name	Filament Dryer
Model	E2
Product Dimensions	400mm × 220mm × 307mm(LWH)
Internal Dimensions	372mm × 192mm × 255mm(LWH)
The maximum size of the wire spool that can be accommodated.	Φ250mm*153mm（1KG×2 or 2KG×1 or 3KG×1）
Net Weight	6.8KG
Operating Environment	Temperature: **10°C-35°C**, Relative Humidity: ⩽95%
Working Temperature Range	35°C-110°C
Humidity Display Range	10%-90% Accuracy ±10% （Genauigkeit ±10%） Note 1: When working temperature ⩾80°C, humidity sensor will start protection mode (displays <10% humidity) Note 2: After temperature drops to 70°C, humidity sensor recovers original accuracy after about 20 hours.
Timer Range	0-99H
Power Input (Please verify local voltage compatibility)	Please select the voltage based on the silk-screen marking on the side of the product.
Maximum Operating Current	2.2A @230V 4.2A@120V
Standby Power	⩽1W
Compatible Filament Diameters	ϕ1.75mm/ϕ2.85mm/ϕ3.0mm

3 Component Description

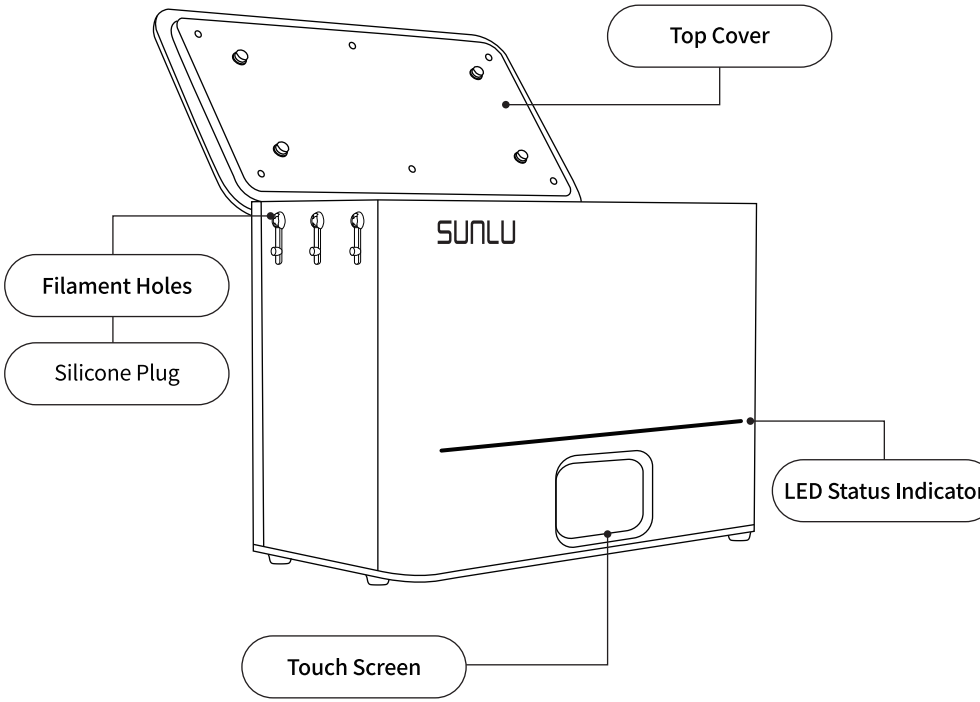

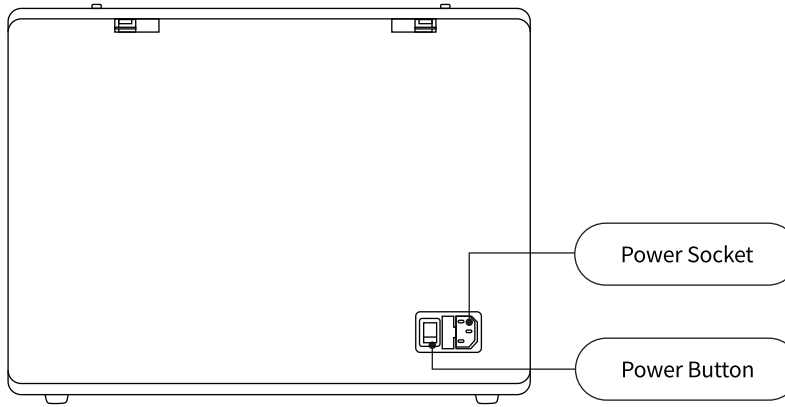

4 Important Notes

- 1.This product can reach temperatures up to 110°C. Please carefully verify current parameter settings (filament type, heating temperature) match your drying needs to prevent filament deformation (Refer to Appendix 1 for recommended drying settings).

- 2.When working temperature ⩾70°C, the filament spool should have a temperature tolerance of at least 70°C to prevent deformation.

- 3.When working temperatures ⩾90°C, the filament spool should have a temperature tolerance of at least 90°C to prevent deformation.

- 4. When using the annealing function (MO2 mode), although this manual provides reference annealing temperatures and times for some filaments, the characteristics of filaments may vary by manufacturer. It is recommended to follow the temperature and time guidelines provided by the filament manufacturer for annealing.

- 5. When working temperature ⩾80°C, the humidity sensor will start protection mode (displays <10% humidity). After temperature drops to 70°C, humidity sensor recovers original accuracy after about 20 hours.

- 6. When working temperature ⩾80°C, external surface temperature may exceed 55°C. Do not touch or move the dryer during operation for safety. (or use appropriate thermal protections)

- 7. The recommended operating ambient temperature for the product is 10°C - 35°C. If the indoor temperature is below 10°C, a slow temperature rise or failure to reach the set temperature is normal. It is suggested to resolve this by appropriately increasing the target temperature.

- 8. To ensure effective drying, avoid opening the top cover during working.

- 9. We recommend keeping the silicone plug of the filament hole open for moisture release during drying. After drying is complete, seal the plug to prevent moisture from entering.

5 Safety Precautions ⚠

- 1. Keep out of reach of children.
- 2. Ensure electrical safety during operation. Do not use near water sources such as bathrooms, bathtubs, or sinks.
- 3. Use original power cable or safety-certified alternatives.
- 4. Turn off power when not in use.
- 5. Do not place the product on temperature-sensitive items during operation.
- 6. Avoid touching the heater or fan during operation to prevent burns. Keep the drying box lid closed when drying filament to retain heat.
- 7. Do not block internal air inlets or outlets to prevent heat accumulation.
- 8. If malfunction occurs, turn off power, unplug device, and contact support team.

6 Operating Instructions

01/ Power Connection

Plug the power cable into dryer's power socket, flip power switch upward.

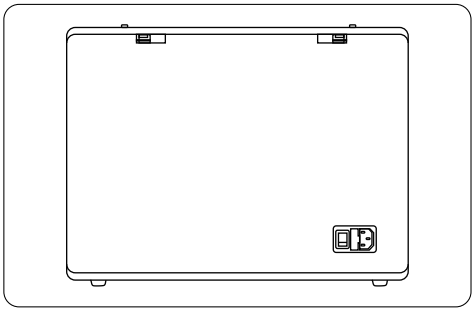

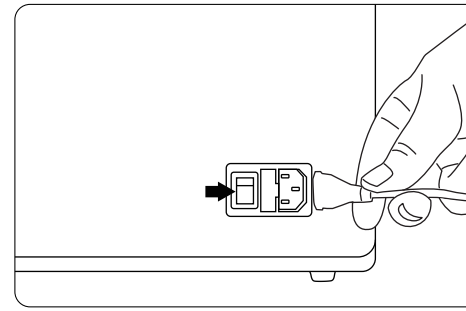

02/ Filament Installation

❶ Open top cover and remove the bearing and roller, insert the roller into the bearing, place it in the recessedgroove at the bottom of the chamber, and slide the roller to ensure smooth rotation.

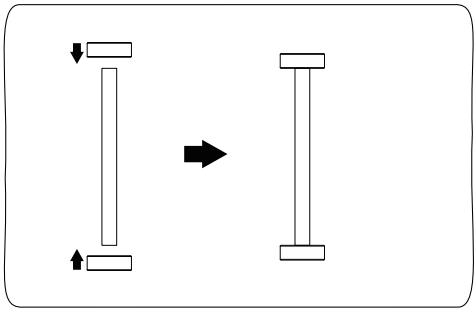

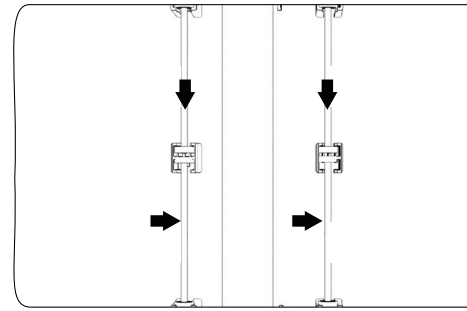

❷ place filament on roller.

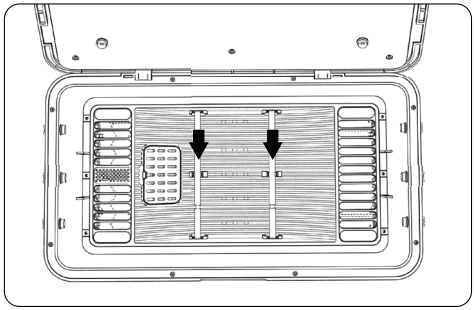

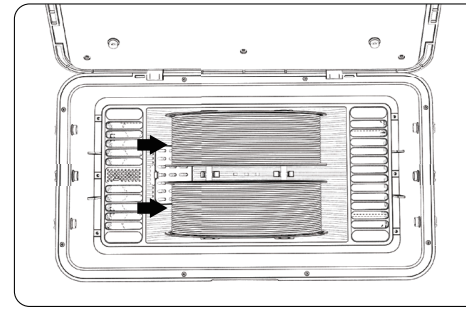

6 Operating Instructions

❸ Insert PTFE tube into filament exit hole. (recommended internal lngth:2-3cm)

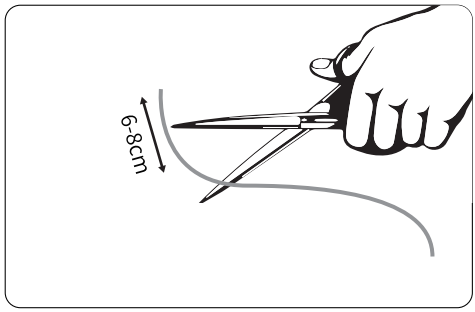

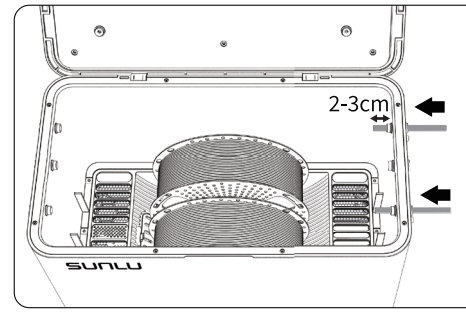

❹ Thread filament through PTFE tube (note direction as shown),Close top cover.

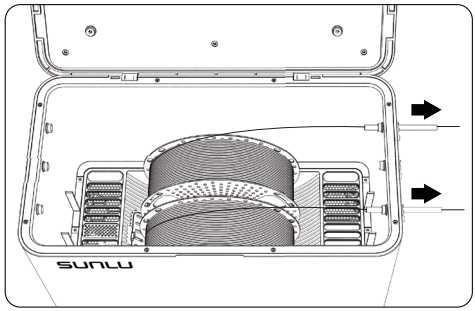

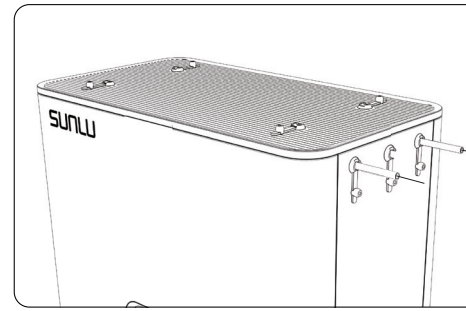

❺ For optimal drying, keep silicone plug open during drying.

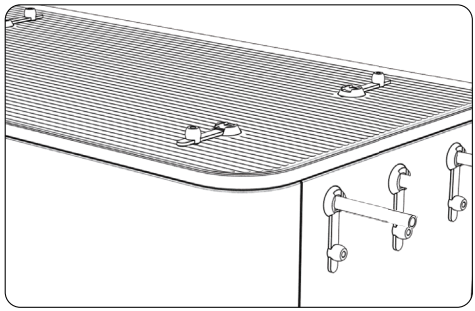

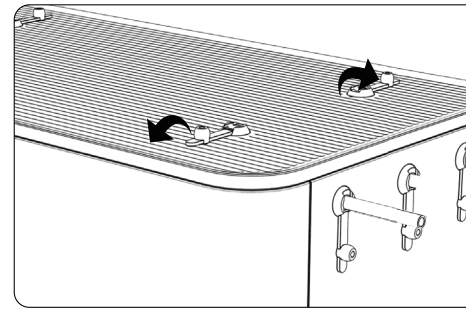

6 Operating Instructions

03/ Power On

Tap power button , display lights up, heater activates, LED indicators lights up.

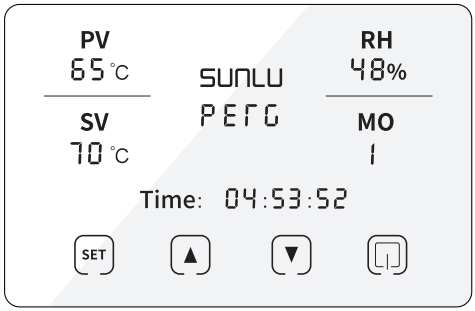

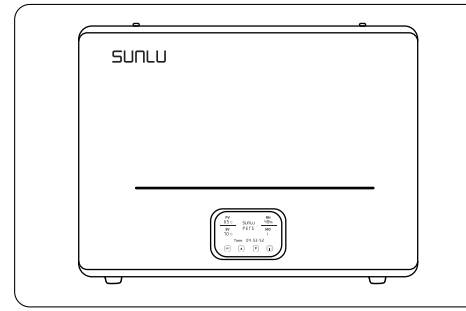

04/ Display Screen Elements

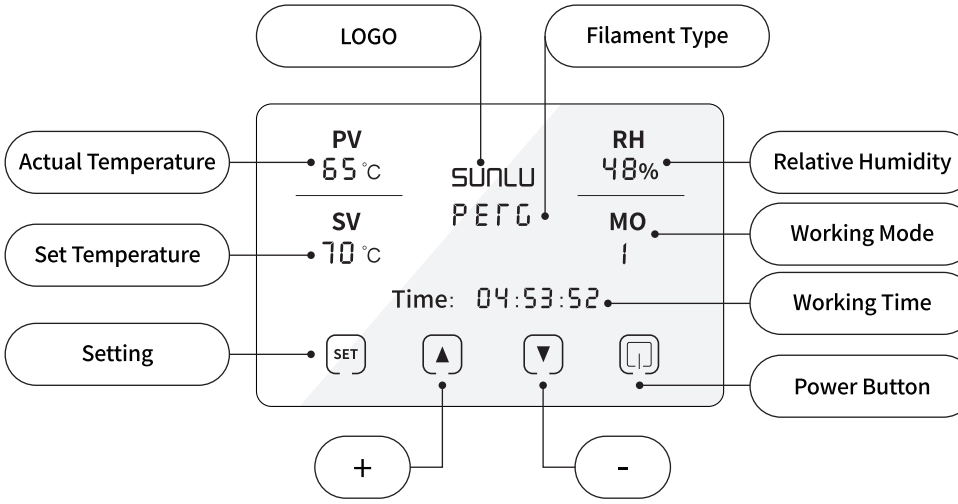

6 Operating Instructions

Filament Drying Temperature/Time Recommendations

(1)Ensure the inserted filament corresponds to the set type and temperature to preclude thermal deformation or inferior drying.
(2)The wire coil's temperature resistance shall be no less than the set drying temperature; otherwise, deformation risk exists.

Material	PA12	PA/PC	PA/PC	ABS	ASA	PVB	PVA	TPU	PETG	WOOD	PLA/PLA+
Drying temperature	90°C	80°C	70°C	65-70°C				50-55°C			
Drying time	2-4h	4-6h	10-12h	4-6h				4-6h			

- -

Appendix 2:Model Annealing Temperature/Time Reference
(Attention:Filament annealing is strictly prohibited)

(1)The annealing temperature and time below are for reference. Set in accordance with the annealing parameters recommended by the filament manufacturer.

(2)Annealing Steps: Heat the drying oven to the set temperature for 30 mins. Place the model for annealing into the oven and set the annealing time. Upon countdown completion, refrain from immediate removal of the model; instead, utilize the oven's heat retention to enable a slow internal temperature drop. Retrieve the model after the oven has cooled, approximately 30 mins, thereby finalizing the annealing.

Material	PC	PA	PA
Annealing temperature	90°C	80°C	90°C
Annealing Time	2-3h	5-6h	2-3h

6 Operating Instructions

05/ Method of using

❶ To Set Heating Temperature (It is recommended to set the heating temperature according to the filament type, with reference to Appendix 1.)

Tap [SET] until SV 210°C flash. Then tap [▲] [▼] to adjust temperature.

---

❷ Set Temperature Unit. (Temperatureinheit einstellen)

Tap [SET] until PV 65°C flash. Then tap [▲] [▼] to switch between °C/°F.

---

❸ Setting LED Display Mode

Tap [SET] until SUNLU flash. Then tap [▲] [▼] to select:

(1) Flowing light: →→ →→

(2) Diffusion light: ←← →→

(3) Steady on: ▬▬ ▬▬

(4) Off : ▭▭ ▭▭

---

❹ Setting Filament Type

Tap [SET] until PETG flash. Then tap [▲] [▼] to select materials. The recommended temperature and time has been preset according to the selected material.

---

❺ Setting Working Time (Die Arbeitszeit einstellen)

Tap [SET] until Time: 04:53:52 flash. Press the button [▲] [▼] at this time to increase or decrease the drying time, and refer to Table 1 for the corresponding drying time for each type of filament.

---

❻ Setting Working Mode (Die Arbeitsmodi einstellen)

Tap [SET] until MO 1 Flash. Then tap [▲] [▼] to switch working mode.

6 Operating Instructions

• MO1 Filament Drying Mode :
When the drying time countdown reaches 00:00:00, the display turns off, heating stops, and the fan stops after 3 minutes(to prevent the accumulation of temperature in the internal heating components and motherboard).

• MO2 Annealing Mode (Glühmodus):
This mode is designed for post-printing annealing of functional filaments such as PA/PC.
a.In this mode, only PA/PC filament types are selectable.
b.Recommended annealing temperature: 90°C, annealing time: 2 hours. (Users should adjust according to the manufacturer' s recommended parameters).
c. When annealing is completed/ Annealing ends (countdown reaches 00:00:00), the display turns off, heating stops, and the fan stops after 3 minutes(to prevent the accumulation of temperature in the internal heating components and motherboard).

• MO3 Humidity Control Mode (Befeuchtigungsregelungsmodus)
a.In this mode, the device won't shut down after countdown, with the time display showing "CLOSED".
b.The self-starting humidity range is adjustable within 30% - 50%. Press the [SET] button until RH flashes. At this time, click the [▲] [▼] button to adjust the humidity range.
c.When the internal humidity reaches the preset value, the equipment will restart and operate until the humidity drops to 10% and stays there for 30 mins.

Attention: During the annealing process, please place the engineering samples in the middle of the annealing tray. Meanwhile, to ensure a good annealing effect, the annealing tray must not block the air inlets and outlets.

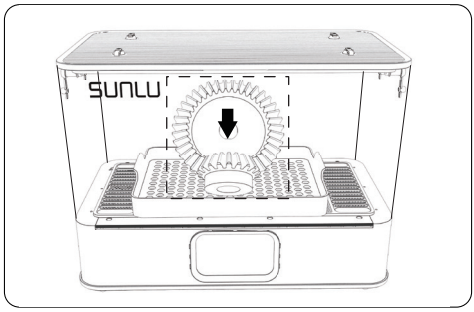

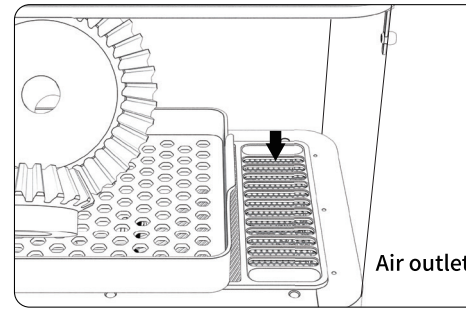

6 Operating Instructions

06/ Power Off（Abschalten）

Double-click ⏻ , the display turns off, heating stops, and the fan stops after 3 minutes(to prevent the accumulation of temperature in the internal heating components and motherboard).

07/ Add Desiccant

The product is equipped with a desiccant compartment, where users can place the desiccant that comes with the filament to keep the Filadryer continuously dry/ to maintain a constant dry environment inside the Filadryer.

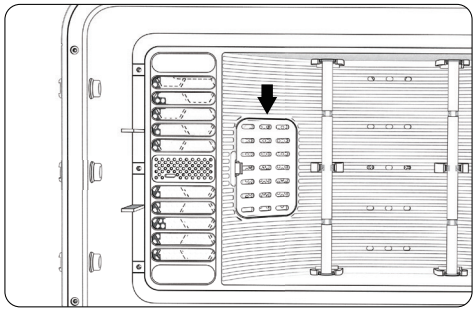

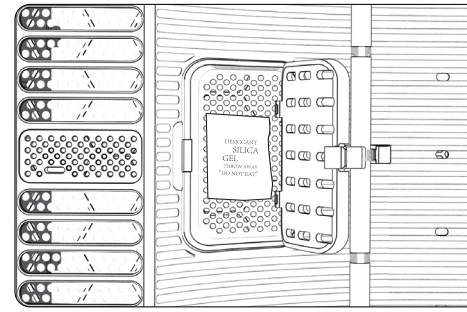

08/ Sealing

To keep the filament dry (and prevent filament filament damp again), it is recommended to plug the silicone plugs in the holes of the filament after drying. (Except for the holes that need to be used for printing)

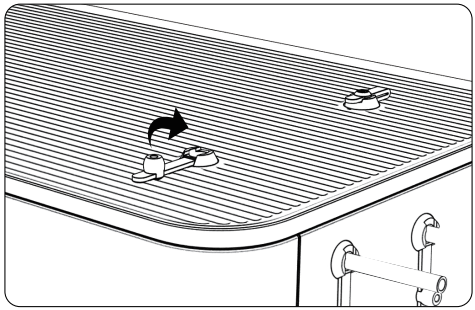

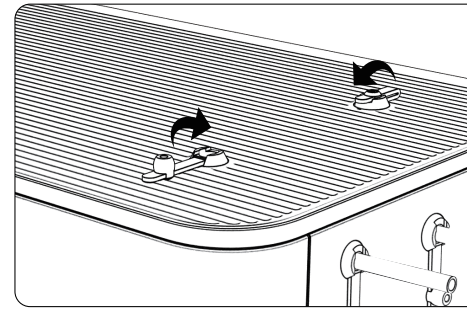

7 Common Troubleshooting

If you encounter the following issues during use, please try the solutions below. If the issue persists, please contact us.

Issue	Possible Causes	Troubleshooting Methods
ER1	1.Poor connection of the temperature and humidity probe. 2. Heating elements not heating. 3. Overheating.	Method 1:Reconnect the temperature and humidity probe or replace the connection cable. Also, check if the temperature and humidity sensor is damaged. Method 2:Check if the signal cable between the mainboard and AC board is properly connected. Also, verify if the heating block wires are properly connected. Method 3:Check if the temperature and humidity probe is installed correctly and if the AC board is functioning properly. Method 4: Examine the screen. If the difference between the actual and set temperatures exceeds 10°C, turn off the power at the rear of the device, open the upper cover for 5 - 10 minutes of heat dissipation, and then restart.
ER2	1. Distribution fan not installed. 2. Distribution fan is jammed.	Method 1: Check if the cooling fan terminals are properly connected. Method 2: Check for any obstructions blocking the cooling fan.
ER3	1. Distribution fan not installed. 2. Distribution fan is jammed.	Method 1: Check if the cooling fan terminals are properly connected. Method 2: Check for any obstructions blocking the cooling fan.
The full screen displays 888888	When subjected to an 8000V electrostatic shock, the circuit traces and display content on the local LCD screen may temporarily become visible.	If the screen exhibits similar phenomena, no action is required—it will return to normal within approximately 10 seconds. This is a normal occurrence.

7 Common Troubleshooting

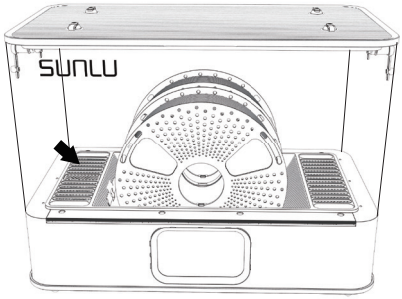

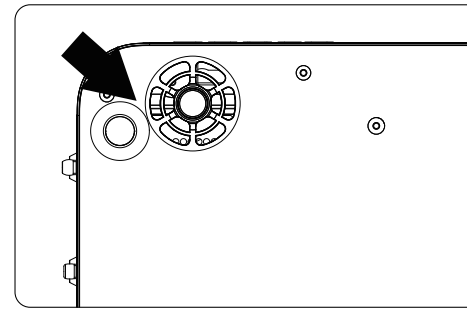

ER2：Check whether the fan here rotates or not.

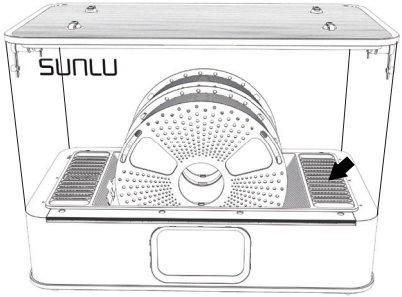

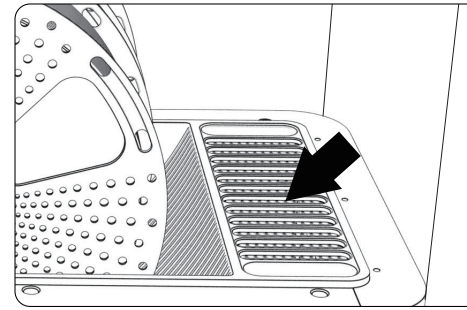

ER3:Check whether the fan here rotates or not.

8 Certificate of Conformity



9 After-Sales Service

1. The product comes with a one-year warranty under normal operating conditions as shown in this manual.
2. The warranty does not cover damages caused by using power cables of different specifications or incorrect operation as per the instructions in the manual during the warranty period.

10 Contact us

Sunlu (Guangdong) Technology Co., Ltd.

Official website: www.3dsunlu.com
Brand cooperation: branding@sunlu.com
Business cooperation: sales@sunlu.com
After-sales service: support@sunlu.com
Manufacturing Address: No. 162 Tanlong North Road, Tanzhou Town, Zhongshan City, China.

Enjoy 3D Printing with SUNLU

YouTube Facebook Instagram TikTok

SUNLU

www.3dsunlu.com