SUNLU

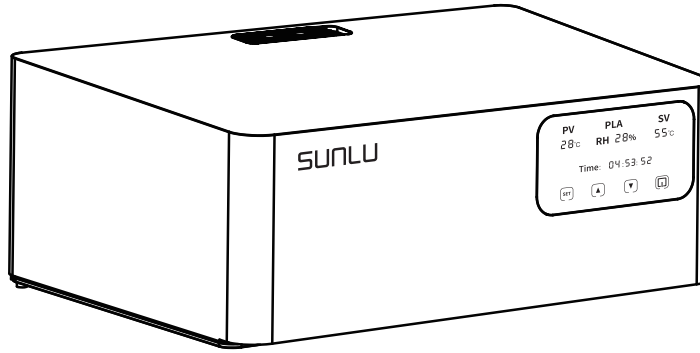


# AMS Heater User Manual

3D Printing-Mate

RoHS FC CE

# CONTENTS

1.Package Contents ---------- 01

2.Technical Specifications ---------- 01

3.Component Description ---------- 02

4.Important Notes ---------- 03

5.Safety Precautions ---------- 04

6.Operating Instructions ---------- 05-10

7.Common Troubleshooting ---------- 10

8.Certificate of Conformity ---------- 11

9. After-Sales Service ---------- 11

10.Contact us ---------- 11

# 1 Package Contents

| | |
|---|---|
| ❶ AMS Heater | X1 |
| ❷ Hinge | X4 |
| ❸ Allen screw | X8 |
| ❹ Allen wrench | X1 |
| ❺ Power Cable | X1 |
| ❻ User Manual | X1 |

# 2 Technical Specifications

| | |
|---|---|
| Product Name | 3D Printing-Mate |
| Model | AMS Heater |
| Product Dimentsions | 363mm×278mm×131mm(LWH) |
| Net Weight | 1.7kg |
| Operating Environment | Temperature: 10°C-35°C, Relative Humidity: ⩽95% |
| Work Temperature Range | 35°C-70°C |
| Humidity Display Range | Refer to the Hygrometer： 10%-90% |
| Time Setting Range | 0-99H |
| Power Input Specifications(Ensure the voltage matches your local supply before use.) | AC 110V 60Hz or AC 220V 50Hz |
| Maximum Operating Current | 2.2A@230V 4.15A @120V |
| Maximum Working Power | 390W |
| Rated Power | 220W |
| Standby Power | 0.6W |

# 3 Component Description

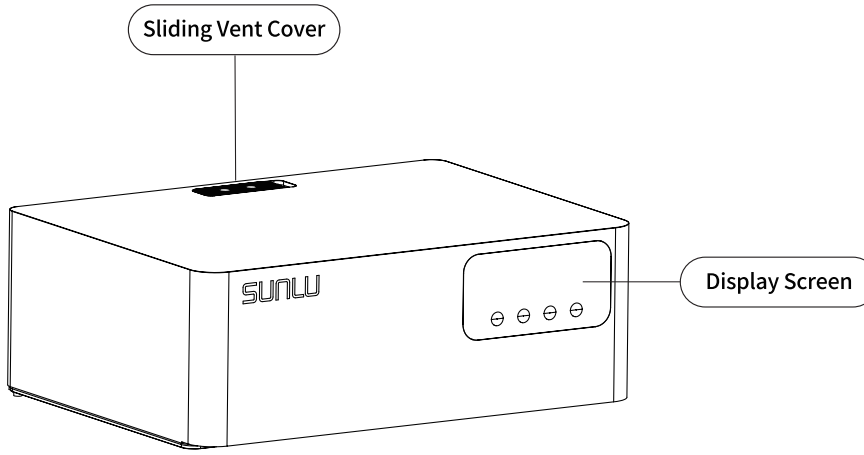


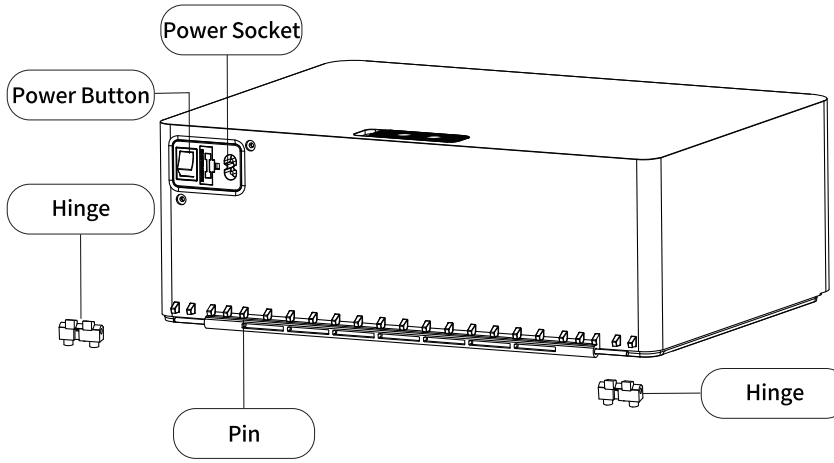

# 4 Important Notes

## ● Filament DryingTemperature/Time Recommendations

| Materia | PLA/PLA+ | WOOD | PETG | TPU | PVA | PVB | ASA | ABS | PA/PC |
|---|---|---|---|---|---|---|---|---|---|
| Drying Temperature | 50-55°C | | | | 65-70°C | | | | 65-70°C |
| Drying Time | 4-6h | | | | 4-6h | | | | 10-12h |

1、To ensure optimal drying results, do not open the AMS Heater during the drying process.

2、When the ambient temperature is below 10°C, slow heating or the actual temperature inside the chamber being slightly lower than the displayed temperature is normal.

3、When setting the working temperature to 70°C, please ensure the filament spool has a temperature tolerance greater than 70°C to avoid deformation.

## 5 Safety Precautions

- 1、When opening this product, lift it only to the designated stop position. Pay attention to the opening angle and force to avoid damage from excessive movement.
- 2、Do not place this product within the reach of children.
- 3、Pay attention to electrical safety during operation. Do not use this product near water, such as in bathrooms, bathtubs, washbasins, or other areas where water is easily accessible.
- 4、Please use the original power cord or a power cord that meets safety certification requirements.
- 5、When not using this product, please turn off the power to avoid sudden fire hazards.
- 6、During the operation of this product, do not place it on temperature-sensitive objects.
- 7、During the operation of this product, do not touch the heater or fan inside the chamber to avoid burns. When drying materials, ensure the drying chamber cover is properly closed to prevent heat loss.
- 8、Avoid moving this product during normal operation to prevent burns caused by the high temperature of the outer surface.
- 9、Do not block the internal air intake and exhaust vents to prevent heat buildup and potential malfunctions.
- 10、If the product malfunctions, please turn off the power and disconnect the power cord from the power outlet, then contact the after-sales support team.

# 6 Operating Instructions

01/ AMS Heater Installation

①After emptying the filament from the AMS unit, close the lid and place it upright

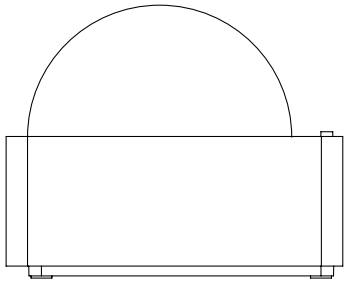

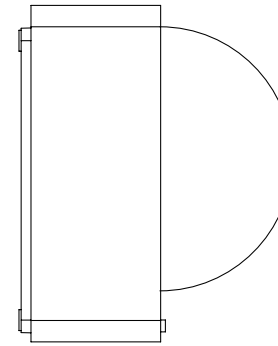

②Remove the four hex screws securing the hinges and detach the top cover

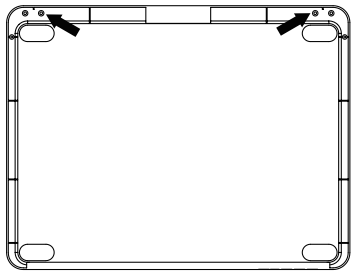

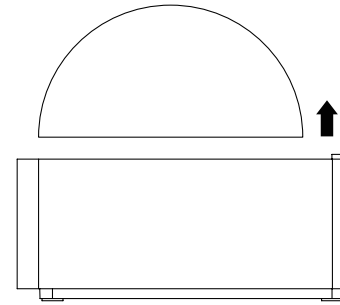

③Remove the two pre-installed hinges and retrieve two replacement hinges and four screws from the accessory kit.

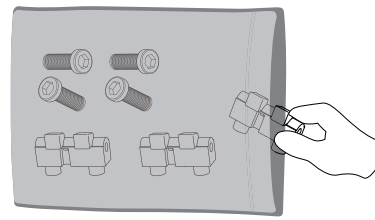

# 6 Operating Instructions

④Position the AMS Heater horizontally and install the hinges onto the mounting pins on both sides.

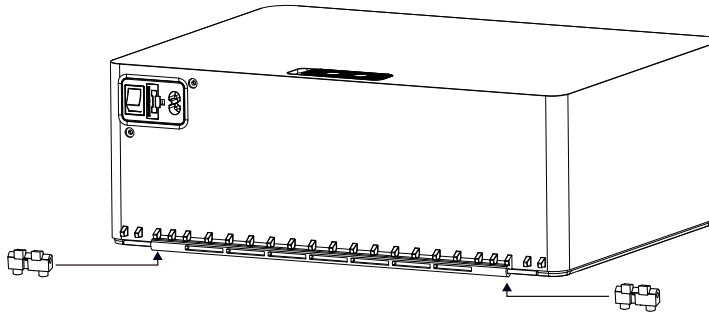

⑤Position the hinge-mounted AMS Heater onto the base plate, aligning it precisely and setting it down level.

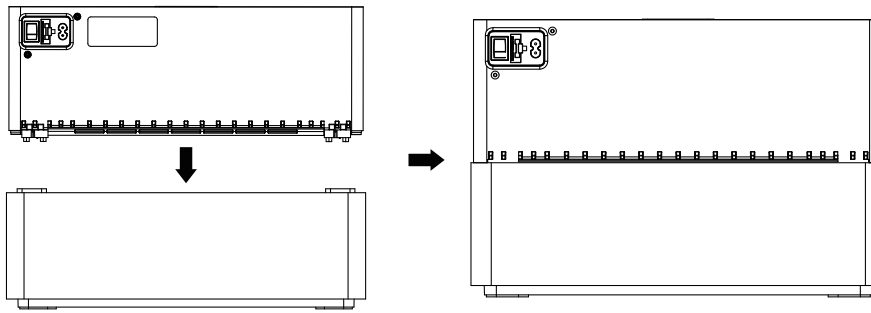

# 6 Operating Instructions

⑥Rotate the AMS to a vertical position and securely fasten all four (4) screws to complete installation.

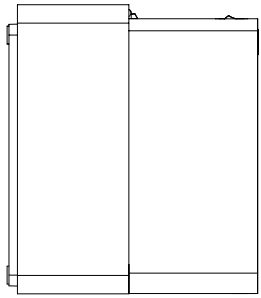

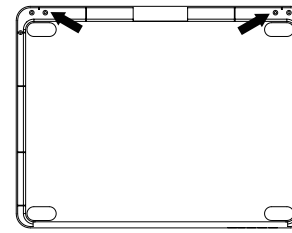

02/ Load the filament

①Open the AMS heater to the hover position and place the filament into the material slot

②Gently push the gray feeder port at the front of the loader, insert the filament approximately 2 cm, and the AMS will detect it and begin auto-feeding

③Close the AMS heater

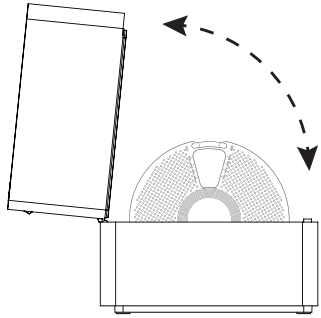

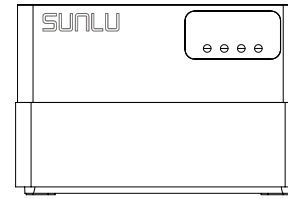


④During drying operation, slide the ventilation cover from the rightmost to the leftmost position until both vents are fully open, which indicates the dehumidification setting

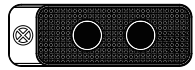

Close ▶

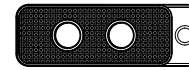

◀ Open

# 6 Operating Instructions

03/ Connect to power (Stromversorgung anschließen)

Insert the power cord into the AMS heater's power socket, then toggle the power switch

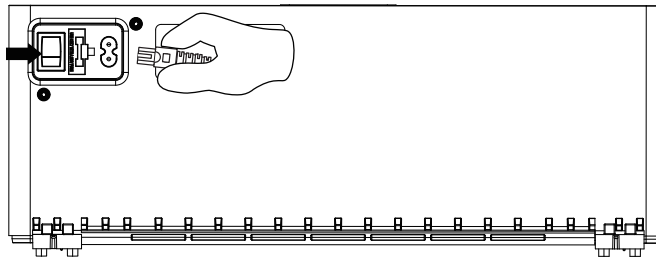

04/ Display Screen Instructions

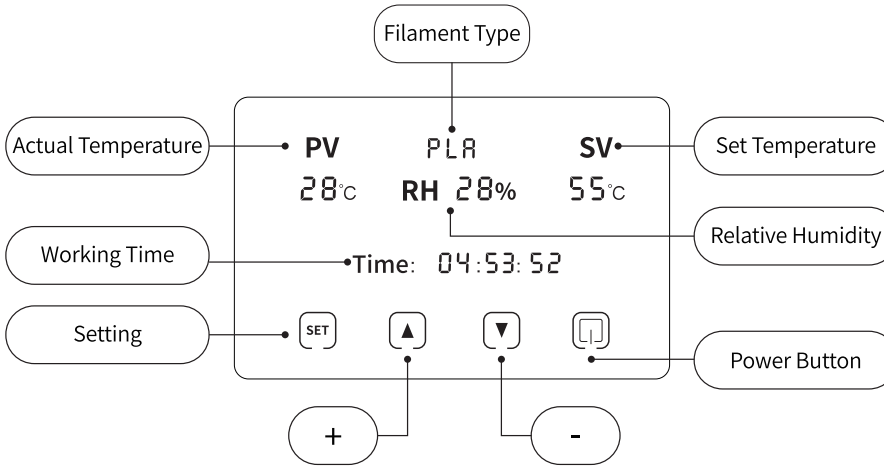

# 6 Operating Instructions

05/ Operating Procedure(Bedienungsvorschrift)

①Click [⏻] to power on, and click [SET] to perform the related operations

②Click [SET] when PLA flashes, then click [▲] [▼] to adjust the filament type (PLA, PETG, TPU, ABS, PA, PC)

③Click [SET] when PLA flashes, then click [▲] [▼] to adjust the filament type to "rH" to activate humidity control mode.

(1) Default heating temperature: 55°C (user-adjustable with save function)

(2) Default operation duration: 6 hours

(3) After the countdown ends, the system remains on with "CLOSE" displayed in the timer area.Heating automatically activates when ambient humidity reaches the default 50% setpoint, and deactivates when humidity falls to 20%

(4) rH Mode Adjustments: User-configurable humidity range: 25%-50% . Custom setpoints automatically update the triggering thresholds in (3)

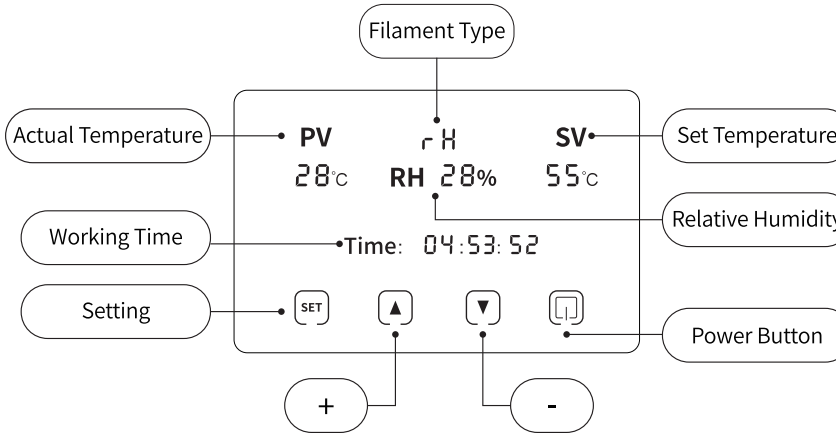

## 6 Operating Instructions

④Click [SET] when °C flashes, then click [▲] [▼] to switch temperature units (°C/°F).

⑤Click [SET] when SV flashes, then click [▲] [▼] to adjust the preset drying temperature for the current filament (35°C-70°C).

⑥Click [SET] when Time flashes, then click [▲] [▼] to adjust the drying time (0-99H). The timer will reset to zero, and the machine will stop working.

⑦Double-click [⏻] to turn off the display, stop the heating, and the fan will shut down after 3 minutes. (Purpose: To prevent internal heat buildup and temperature accumulation on the motherboard during the heating process.)

## 7 Common Troubleshooting

If the product encounters the following issues during use, please try the methods listed in the table below to troubleshoot. If the issue persists, please contact us.

| Issue | Possible Causes | Troubleshooting Methods |
|---|---|---|
| Failure to Power On | Abnormal Power Connection | Check whether the power cord is properly connected to the socket, and verify if the fuse is blown. |
| Screen Garbling/ Incomplete Display | Poor contact or a damaged display screen. | Power off and restart. If the issue persists, the display screen may need to be replaced. Please contact us. |
| ER1 | Abnormal Temperature Detection | Check whether the temperature sensor connection is secure. |
| ER2 | Left PTC Heating Fan Malfunction | Check whether the fan is not rotating or is obstructed by foreign objects. |
| ER3 | Right PTC Heating Fan Malfunction | Check whether the fan is not rotating or is obstructed by foreign objects. |

## 8 Certificate of Conformity

| | |
|---|---|
| Product Name: | Manufacture Date: |
| Inspector: | Inspection Date: |

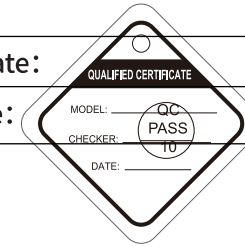


## 9 After-Sales Service

1. The product comes with a one-year warranty under normal operating conditions as shown in this manual.
2. The warranty does not cover damages caused by using power cables of different specifications or incorrect operation as per the instructions in the manual during the warranty period.

## 10 Contact us

### Sunlu (Guangdong) Technology Co., Ltd.

Official website: www.3dsunlu.com
Brand cooperation: branding@sunlu.com
Business cooperation: sales@sunlu.com
After-sales service: support@sunlu.com
Manufacturing Address: No. 162 Tanlong North Road, Tanzhou Town, Zhongshan City, China.

### Enjoy 3D Printing with SUNLU

YouTube Facebook Instagram TikTok

SUNLU

www.3dsunlu.com